1. SCOPE

The SAW filter series have broad line up products meeting all broadcast standard including NTSC, PAL and SECAM systems. These filters are composed of two interdigital transducers on a single-crystal piezoelectrical chip. They are used in electronic equipments such as TV and so on.

2.Construction

2.1 Dimension and materials

Type: BF43A2D

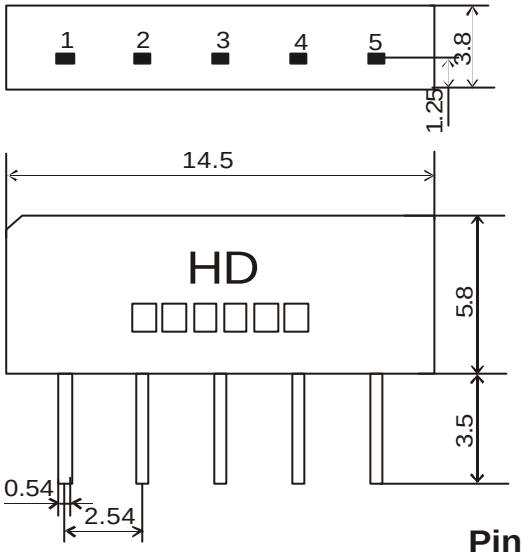

Pin configuration

1 Input
2 Input-ground
3 Chip carrier-ground
4 Output
5 Output

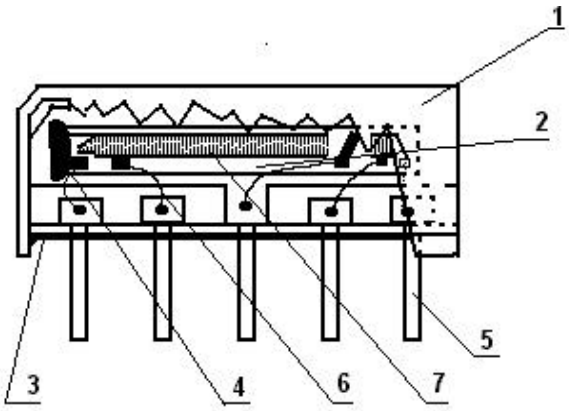

Components	Materials
1.Outer casing	PPS
2.Substrate	Lithium niobate
3.Base	Epoxy resin
4.Absorber	Epoxy resin
5.Lead	Cu alloy+Au plate
6.Bonding wire	AlSi alloy
7.Electrode	Al

2.2. Circuit construction, measurement circuit

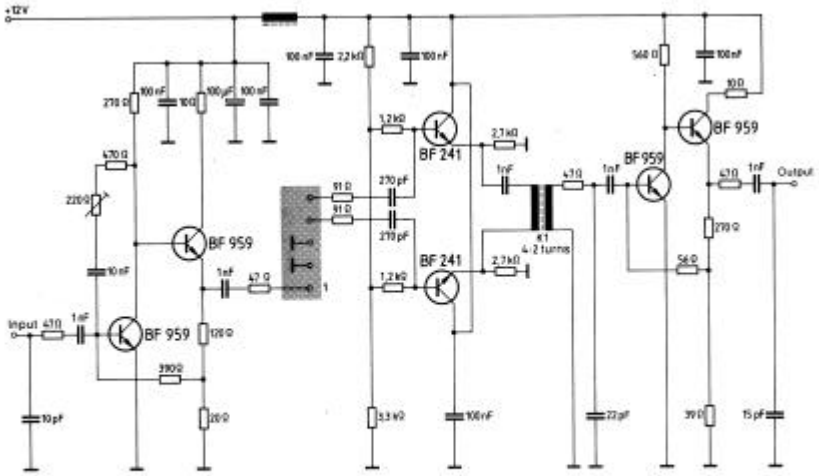

Test circuit for SIP-5 filter
Input impedance of the symmetrical post-amplifier: 2 kΩ in parallel with 3 pF

3.Characteristics

Standard atmospheric conditions

Unless otherwise specified , the standard rang of atmospheric conditions for making measurements and tests is as follows;

Ambient temperature : 15C to 35C
Relative humidity : 25% to 85%
Air pressure : 86kPa to 106kPa

Operating temperature rang

Operating temperature rang is the rang of ambient temperatures in which the filter can be
operated continuously. -10C ~ +60C

Storage temperature rang

Storage temperature rang is the rang of ambient temperatures at which the filter can be stored
without damage.
Conditions are as specified elsewhere in these specifications. -40C ~ +70C

Reference temperature +25C

3.1 Maximum Rating

DC voltage VDC	**12**	**V**	**Between any terminals**
AC voltage Vpp	**10**	**V**	**Between any terminals**

3.2 Electrical Characteristics

Source impedance Zs=50 ohm

Load impedance Z_L=2k ohm//3pF T_A=25C

Item		Freq	min	typ	max	
Center frequency		Fo	-	43.75	-	MHz
Insertion attenuation Reference level		43.81MHz	12.8	14.8	16.8	dB
Pass bandwidth		B_{3dB}	-	6.0	-	MHz
		B_{30dB}	-	7.6	-	MHz
Relative attenuation		41.28MHz	-	0.3	-	dB
		46.34MHz	-1.3	0.2	1.7	dB
		40.81MHz	1.1	2.7	4.3	dB
		46.81MHz	1.1	2.7	4.3	dB
		39.81MHz	36.0	50.0	-	dB
		47.81MHz	35.0	48.0	-	dB
Sidelobe	35.06~39.06MHz		36.0	45.0		dB
	39.06~39.81MHz		34.0	42.0		dB
	47.81~50.06MHz		34.0	42.0		dB
	50.06~55.06MHz		36.0	46.0		dB
Temperature coefficient			-72			ppm/k

3.3 Environmental Performance Characteristics

Item Test condition	Allowable change of absolute Level at center frequency(dB)
High temperature test 70℃ 1000H	< 1.0
Low temperature test -40℃ 1000H	< 1.0
Humidity test 40℃ 90-95% 1000H	< 1.0
Thermal shock -20C==25C==80C 20 cycle 30M 10M 30M	< 1.0
Solder temperature test Sold temp.260C for 10 sec.	< 1.0
Soldering Immerse the pins melt solder at 260C+5/-0C for 5 sec.	More then 95% of total area of the pins should be covered with solder

3.4 Mechanical Test

Item Test condition	Allowable change of absolute Level at center frequency(dB)
Vibration test 600-3300rpm amplitude 1.5mm 3 directions 2 H each	<1.0

Drop test On maple plate from 1 m high 3 times	<1.0
Lead pull test Pull with 1 kg force for 30 seconds	<1.0
Lead bend test 90° bending with 500g weigh 2 times	<1.0

3.5 Voltage Discharge Test

Item Test condition	Allowable change of absolute Level at center frequency(dB)
Surge test Between any two electrode 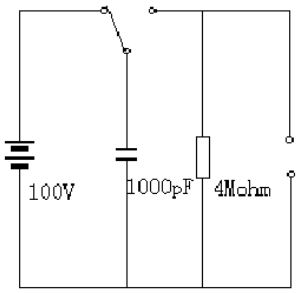	<1.0

3.6 Frequency response

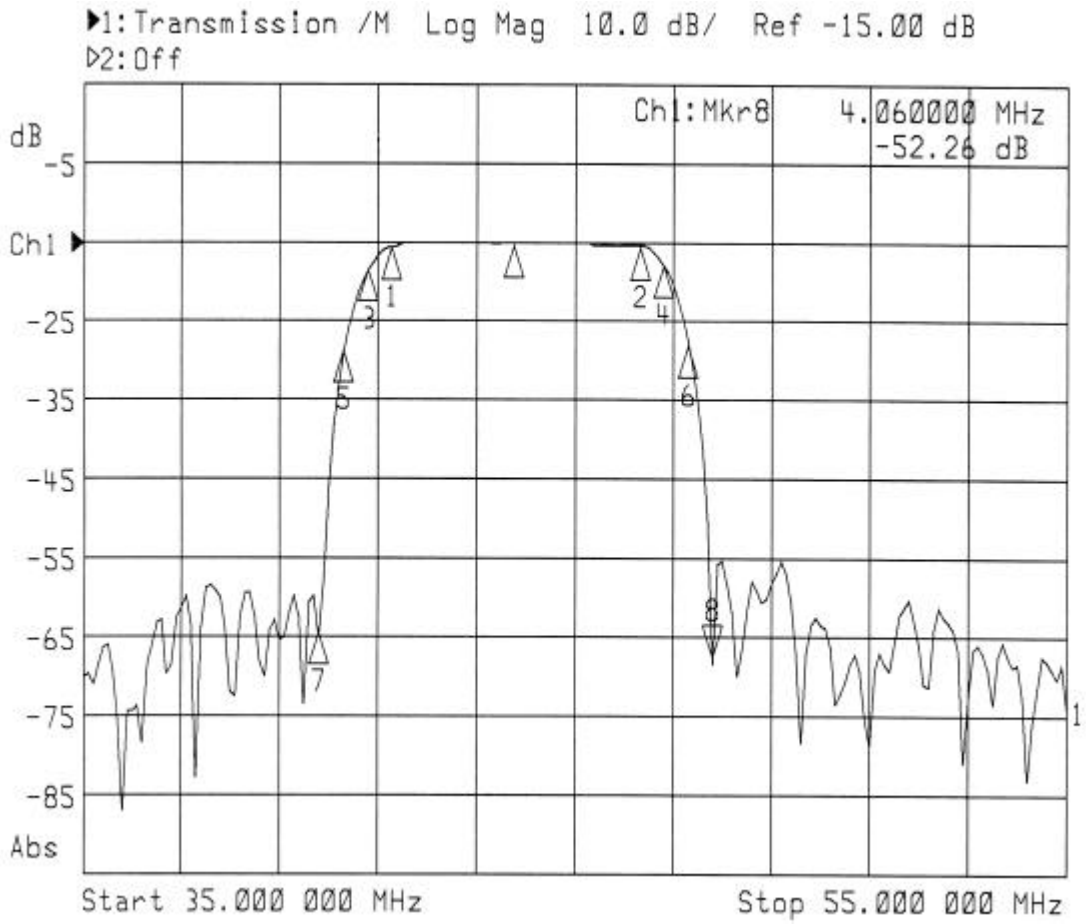

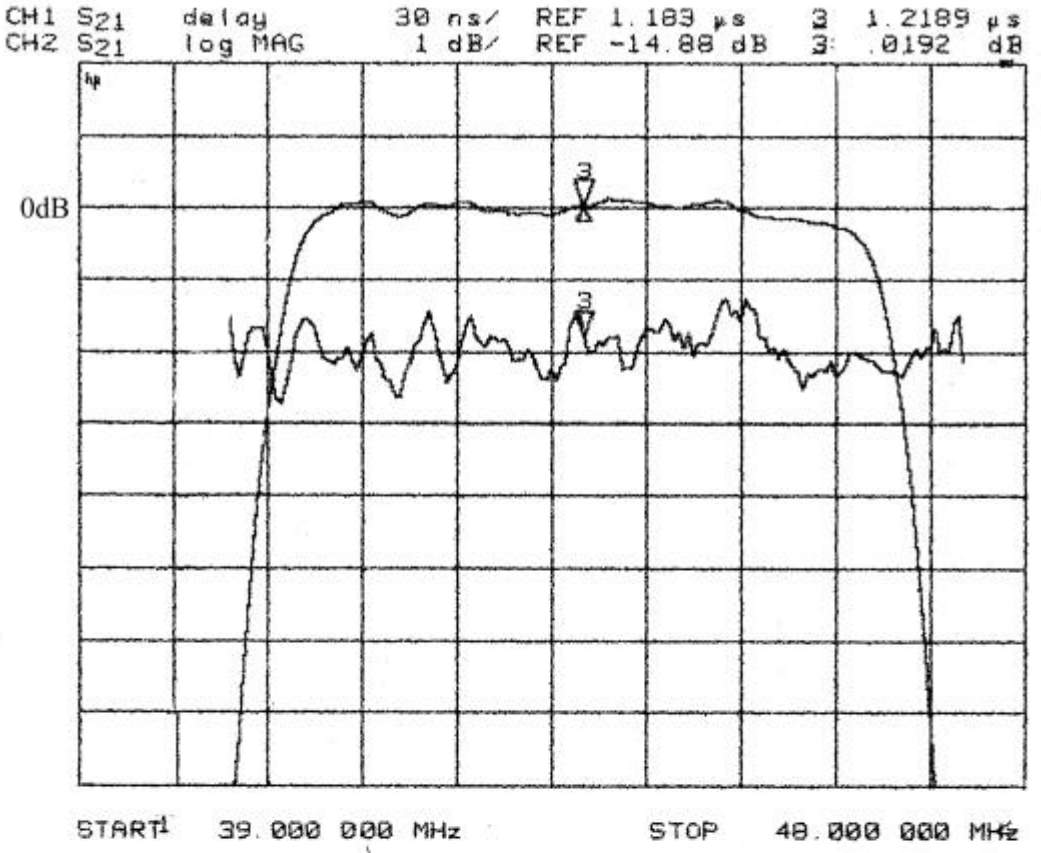
CH1 S21 delay 30 ns/ REF 1.183 µs 3 1.2189 µs
CH2 S21 log MAG 1 dB/ REF -14.88 dB 3: .0192 dB
0dB
START 39.000 000 MHz
STOP 48.000 000 MHz

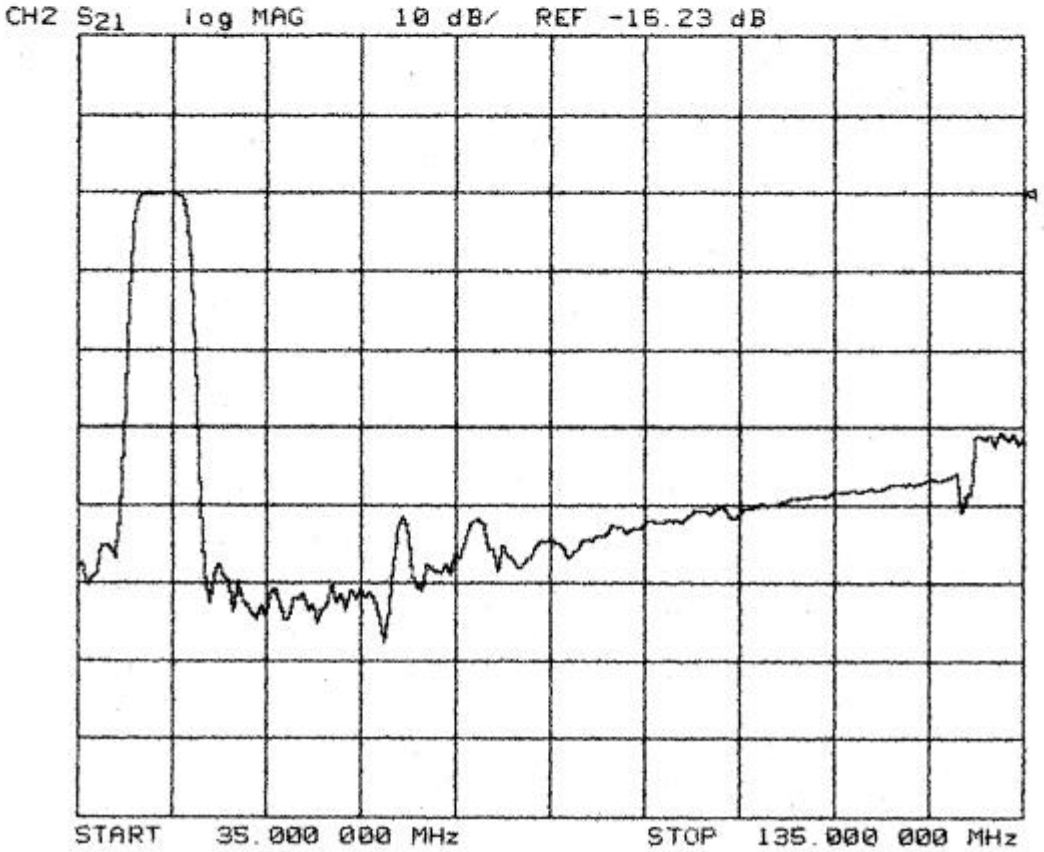
CH2 S21 log MAG 10 dB/ REF -16.23 dB
START 35.000 000 MHz
STOP 135.000 000 MHz